SJT-YBA Voice Announcement Device

V12 Version



Shenyang Bluelight Automatic Technology Co.

1. Main Features:

- Reliable performance, interference-free
- Convenient installation, commissioning-free
- Announcement of elevator running direction and floor

2. Structure Diagram and Principle

The diagram of the SJT-YBA-V12 components is as follows:

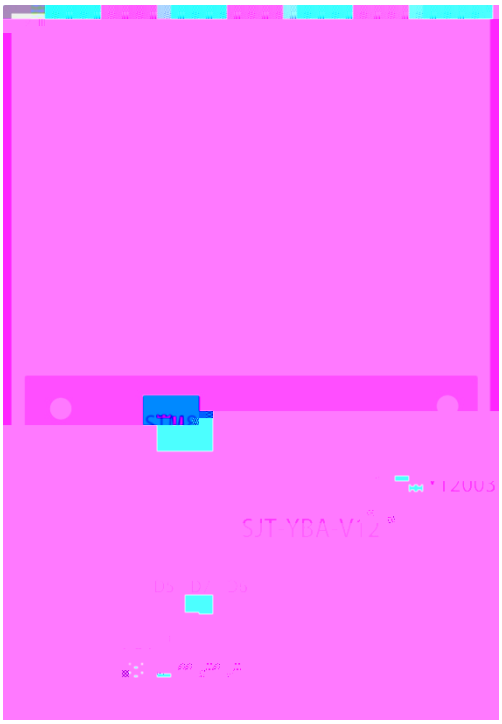

Figure 1 System Structure Diagram

Detailed Instruction:

U1 is the STM8S208 of SCM STMicroelectronics, WT2003 voice module transfer audio files to analog voice signals. J1 is wiring terminals, Button KEY1, KEY2 can set the relevant parameters, USB interface used to connect the computer to update the voice file, LS1 is the socket of speaker which could be single-channel or dual-channel. D5 is the communication light, D7 is the power light, D6 is the status light of CPU.

Principle:

Voice broadcasting content are all stored in the flash memory, WT2003 voice module transfer its inner voice files to analog voice signals, through operational amplifier, it is transmit to speaker, then gives out euphonic sound. The STM8S208 of SCM STMicroelectronics and CAN interface circuit 82C250 compose the hardware of CAN main bus. After voice announcement communicates with the elevator control system, SCM gives the corresponding announcement according to received floor information.

3. Configuration and Installation

3.1 Structure Diagram

3.1.1 Plane Layout

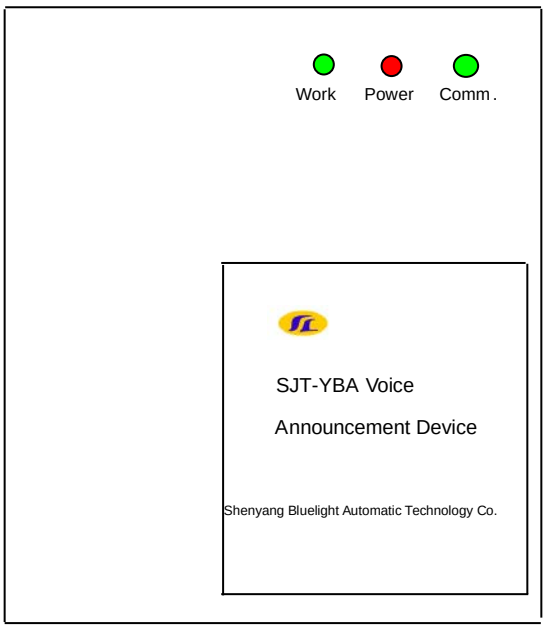

Figure 2 Plane layout

3.1.2 Side layout

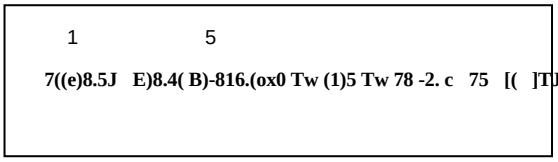

Figure 3 Side Layout

3.2 Input terminals Definition

Voice Box	3.5mm audio output
J1-1	24V
J1-2	0V
J1-3	CANH
J1-4	CANL
J1-5	
USB	USB Interface

Wring diagram of serial communication system:

The upper part in Figure 4 is terminals on voice announcement device, the lower part is terminals of traveling cable, please connect them as shown in follows:

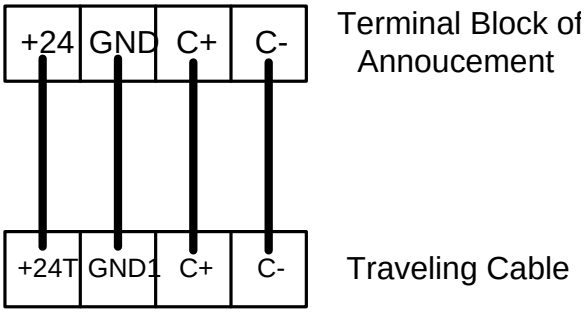

Figure 4 Wiring Diagram

4. Operation Instruction

4.1 The scope of floors broadcasting:

4.1.1 The standard broadcasting scope of this serial system announcement is: -3~50, B, G, B1, and B2. The explanation of those characters is:

"G": The Ground Floor;

"B": B floor;

"B1": Basement One;

"B2": Basement Two;

4.1.2 When elevator reduces the speed and before stop at leveling, the device will announce. For example: "arriving floor one"

4.6 door open/ close announcement function Ö

4.6.1 Select the door open/close announcement function or not by setting menu

4.6.2 When system outputs door open signal, it announce voice "Open door". After that, if the door open signal-output, the voice will be announced again.

4.6.3 when system outputs door close signal, it announce voice "Close door", if there is car call be registered before door closing, it will announce running direction first, then announce "Close door".

4.7 Broadcasting Running Direction

4.7.1 While door keeps open and there is a call registered, it will announce prepare running direction as "Going up" or "Going down".

4.7.2 When door is at closing process, there is door open signal comes from door open button or door sensor, it will announce the running direction prepared again.

4.7.3 If the door keeps open, after announcing the running prepared direction, 20 seconds later, it will be announced again.

4.8 The Announcement for Overload Function

4.8.1 If there is an overload signal; it will give a voice "car is overload" no

4.8.2 If the car always gets in overload status, it will announce "car is overload" in every 20 seconds.

4.9 The Announcement for Elevator in Fire Service Status.

4.9.1 When elevator is in fire status, it will announce "fire alarm! Get out elevator immediately"

4.9.2 If elevator is in fire status all long, it will announce the alarm voice in every 20 seconds.

4.10 The Announcement for Elevator in Sliding Status.

4.10.1 When elevator is in Sliding status, it will announce "Elevator fault! Get out elevator immediately"

4.10.2 If elevator is in sliding status all long, it will announce the alarm voice in every 20 seconds.

5. Commissioning Instruction:

5.1 Setting Menu

Setting Mode Ö The voice station is installed successfully, after the power supply, you will hear " Operation mode ", in this state, long press the Menu key 3S and then release, you will hear the "setting mode", enter the set mode.

In the setting mode, click the Menu button to switch the menu, click the Set button to switch settings options, menu and settings options have voice prompts, the specific content is as follows:

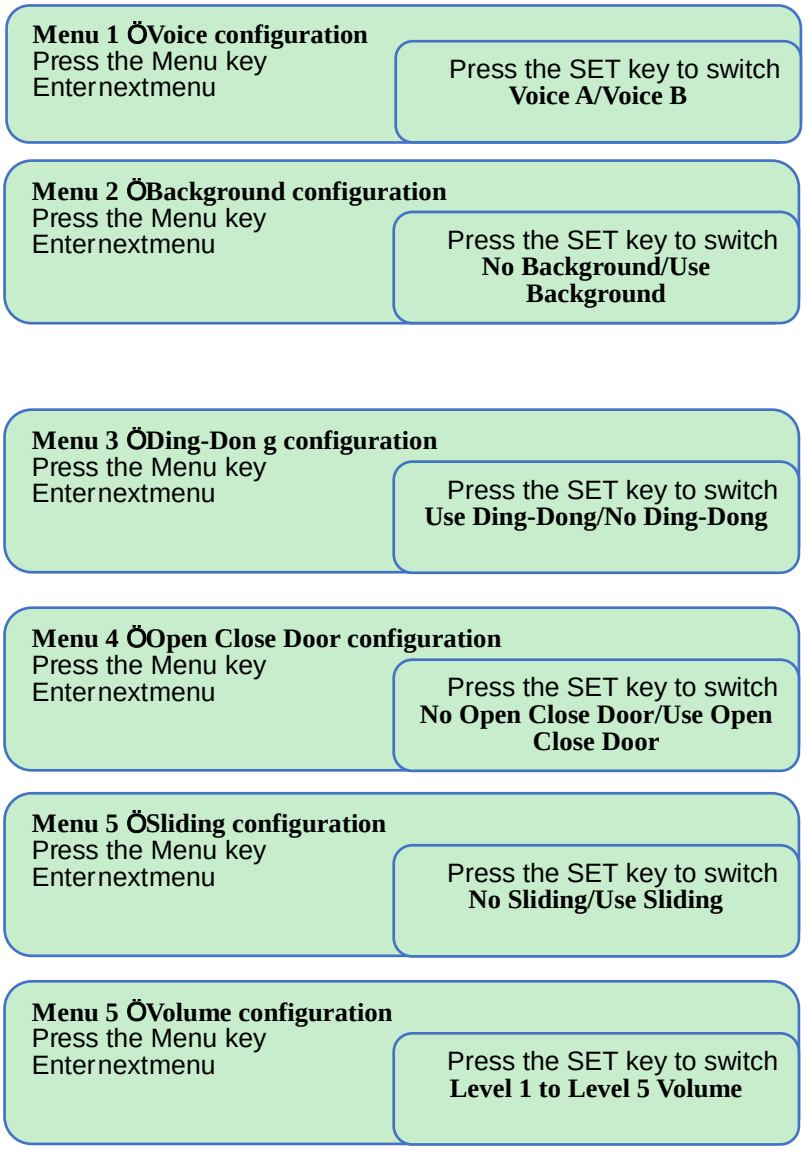

Operation mode Ö In the setting mode, long press the Menu key 3S and then release, will hear the "operation mode" voice, enter the operation mode. If in the set mode, more than 60s, no key press, will automatically withdraw from the set mode, enter the operation mode.

5.2 Voice File Self-Studying

When the voice station is installed successfully, Press the Menu key and the Set key before the power is on, and then the power is switched on. When the green work light D6 blinks, release the Menu key and the Set key, voice file self-studying begin [Note 1].

After entering the voice file self-studying mode, the voice station will learn the file information in the WT2003 voice module. After changing the file information in the WT2003 voice module, it is necessary to do a voice file self-studying again.

When the study is completed and successful, you will hear "voice file update

success," and "operation mode". If the learning fails, it will not emit any sound, and the program reset

[Note: 1] rewriting voice station program, the next power will automatically enter into the voice file self-studying state; the voice station is connected with the computer through the USB data line, the next power will automatically enter into the voice file self-studying state.

5.3 Indicator light status

The Red Indicator light D7: Power status

The Green Indicator light D5: CAN status

The Green Indicator light D6:

——Operation mode: Slow flashing (periodic 2s)

——Setting mode: Medium speed scintillation (periodic 1s).

——Single button insertion when power up: Fast flashing

——Voice File Self-Studying: Fast flashing

——Connecting the computer: Breathing flashing

——Always bright, indicating that the program failure, may be voice module damaged, or voice file self-learning failure.

——Not bright, indicating an unknown fault, may be hardware damage (such as LED damage).

5.4 Common Fault Handling

5.4.1 D3 doesn't work, please check the inp Tc 0St2 -1.3 p.n fat

H - n

Appendix I: Update Instruction of Voice Files

1. Connect WT2003 Module to PC with USB cable, then a removable disk appears on MyComputer.

2. Copy the corresponding voice files to the root directory of the removable disk. The name rule of the voice files as follows,

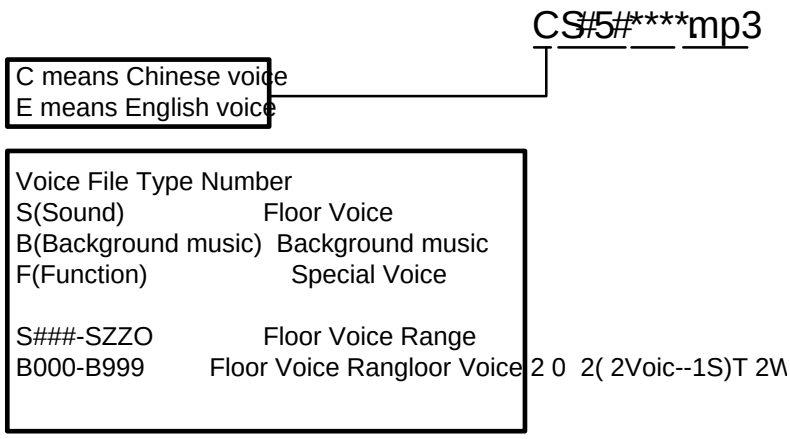

Appendix II: Voice Files Address List

If the setting floor display is not in this list, please contact us to get the corresponding voice file name.

Floor Display	Voice File(.mp3)		Floor Display	Voice File(.mp3)		Special Voice	Voice File(.mp3)	
	Chinese	Chinese &		Chinese	Chinese &		Chinese	Chinese &